Go 450

127 31 86

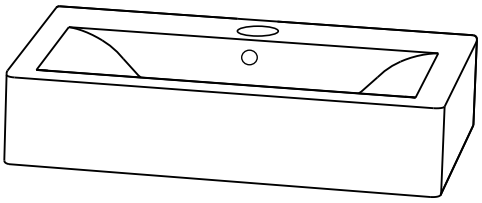

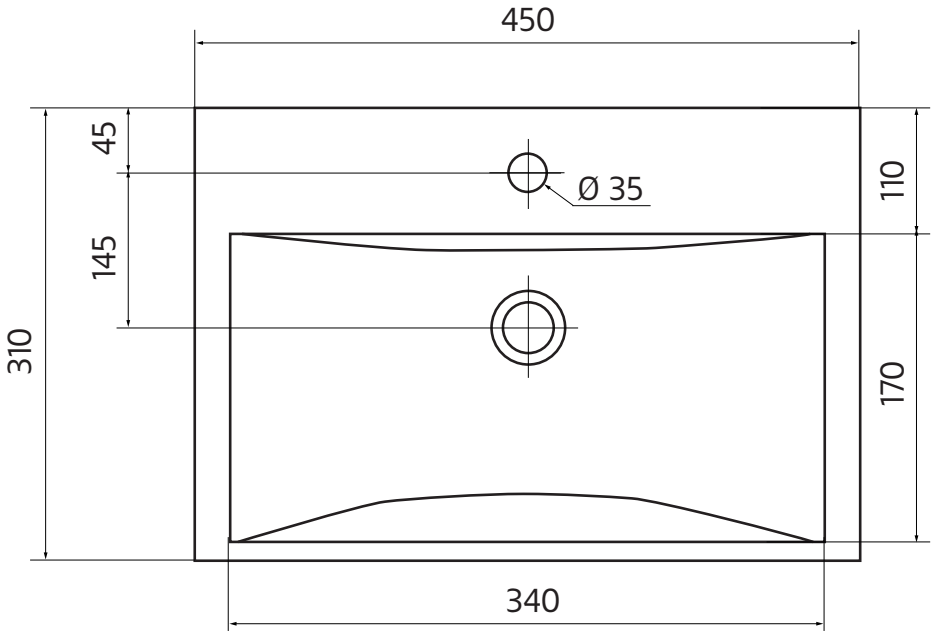

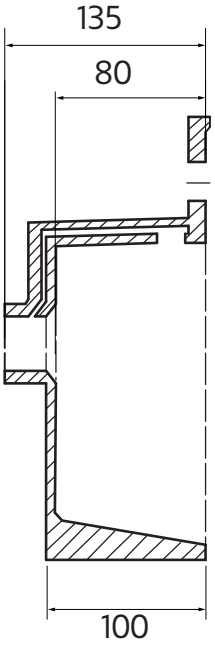

2016-10-24

www.hafa.se